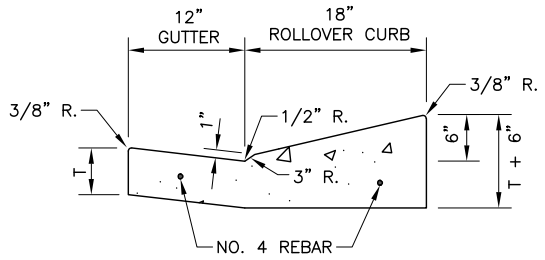


SECTION A–A
NTS

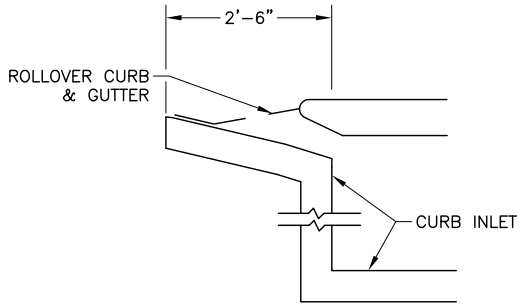


SECTION B–B
NTS

NOTE: SEE CURB INLET DETAILS

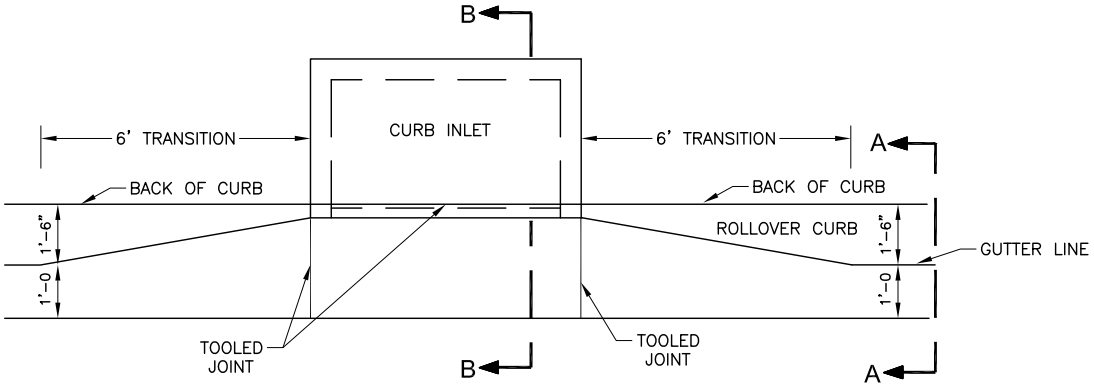


NOTE:

IN THE TRANSITION AREA THE 18" ROLLOVER CURB WILL TRANSITION TO A 6" VERTICAL CURB AND THE GUTTER WILL TRANSITION TO A 4" DEPRESSION AT THE FACE OF THE INLET.

ROLLOVER CURB & GUTTER AT INLET
NTS REV: 7/25/17

| CITY OF ARLINGTON, TEXAS | | |
|---|---|---|
| ROLLOVER CURB & GUTTER AT INLET | | |
| DATE: | SCALE: NTS | SHEET____OF____ |
| DESIGNED BY: | DRAWN BY: | CHECKED BY: |